Optimum Performance Products Inc
Official Brembo Distributor
www.oppracing.com
info@oppracing.com
Ph# 1-604-942-6744
Fx# 1-604-942-6745

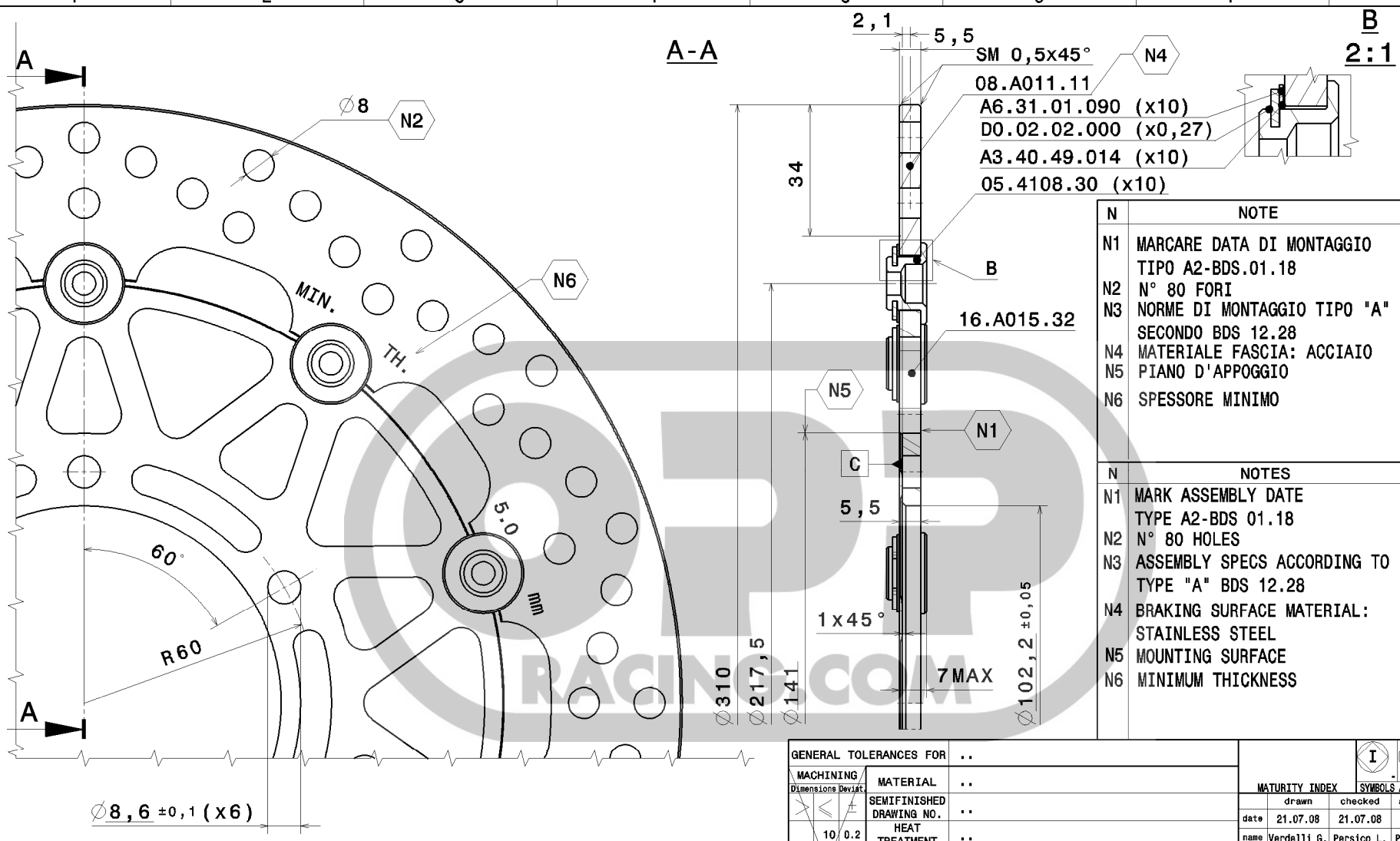

N	NOTE
N1	MARCARE DATA DI MONTAGGIO TIPO A2-BDS.01.18
N2	N° 80 FORI
N3	NORME DI MONTAGGIO TIPO "A" SECONDO BDS 12.28
N4	MATERIALE FASCIA: ACCIAIO
N5	PIANO D'APPOGGIO
N6	SPESSORE MINIMO

N	NOTES
N1	MARK ASSEMBLY DATE TYPE A2-BDS 01.18
N2	N° 80 HOLES
N3	ASSEMBLY SPECS ACCORDING TO TYPE "A" BDS 12.28
N4	BRAKING SURFACE MATERIAL: STAINLESS STEEL
N5	MOUNTING SURFACE
N6	MINIMUM THICKNESS

DRAWING CHANGES

Pos.			
A	DN-08.HA.043	21.07.08	Verdelli Gabriele

GENERAL TOLERANCES FOR	..	
MACHINING Dimensions Deviat.	MATERIAL	..
	SEMIFINISHED DRAWING NO.	..
10 0.2	HEAT TREATMENT	..
10 100 0.3	SURFACE TREATMENT	..
100 500 0.5	MECHANICAL PROPERTIES	R .. H .. ...
2°	BREMBO BDS	01.18 - 12.28
	INTERNATIONAL STANDARDS	..
Dimensions in MILLIMETERS	CUSTOMER-VEHICLE	..
	ORIGINAL PART NUMBER-INDEX	..
Roughness in Ra (µm) UNI EN ISO 4287	PART NAME	DISCO DP 310

Drawing sheet format ISO 5457 - A3

MATURITY INDEX — I M R S — SYMBOLS ACC. TO BREMBO BDS-01.27

	drawn	checked	approved
date	21.07.08	21.07.08	21.07.08
name	Verdelli G.	Persico L.	Persico L.

☒ CALCULATED MASS ☐ WEIGHED MASS 1,459 kg

SCALE 1:1 (2:1) — CAD SYSTEM CATIA V5 — IMDS ☐ YES ☐ NO

brembo®

REPLACE .....

Copyright © Brembo S.p.A.
All rights reserved.
Any reproduction, even partial and with any kind of instrument, is forbidden. No disclusure to third parties or to Brembo competitors is allowed.

SPECIFICATIONS ..

SHEET 1/1 — DRAWING NO. R 08.9737.32 — IND -

OPP RACING.COM