FRONT MASTER CYLINDER

PS 11

10.7677.12

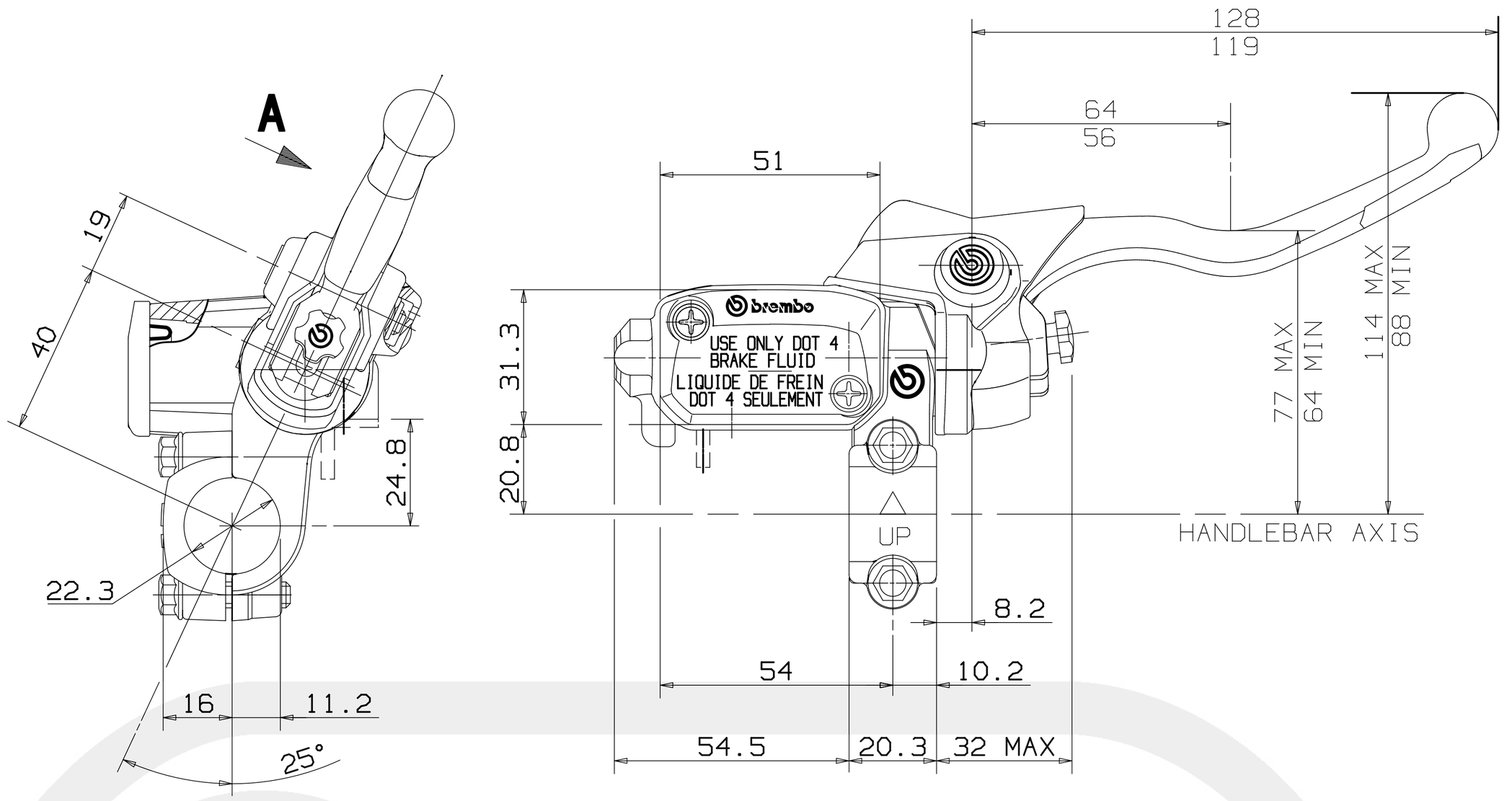

N.B.: Lever dimension refer to view from A

DESCRIPTION

Front master cylinder with incorporated reservoir

Construction material:alluminium alloy.

Operating fluid:brake fluid DOT 4

Master cylinder body color: Anodic oxidation natural color

Lever color: Polished

Lever axis distance:17

TECHNICAL CHARACTERISTICS

Piston diameter:	11.0 mm
Weight:	0.280 Kg
Reservoir volume:	13.0 cm³

AVAILABLE SPARE PARTS

SPARE PARTS / CODE	LEVER	CLAMP	CAP	LEVER PIN	WINDOW	DUST COVER
10.7677.12	110.4594.97	110.2815.22	110.2704.77	110.2798.12	110.4533.10	110.3530.51

ANTI-BUBBLE	ADJUSTER	PISTON SET M/C
110.4771.10	110.5717.11	110.7677.04

Indicating informations subject to modification.
For further specifications contact Technical Section.

LAST UPDATE:03/03/2000