XA5.21.10

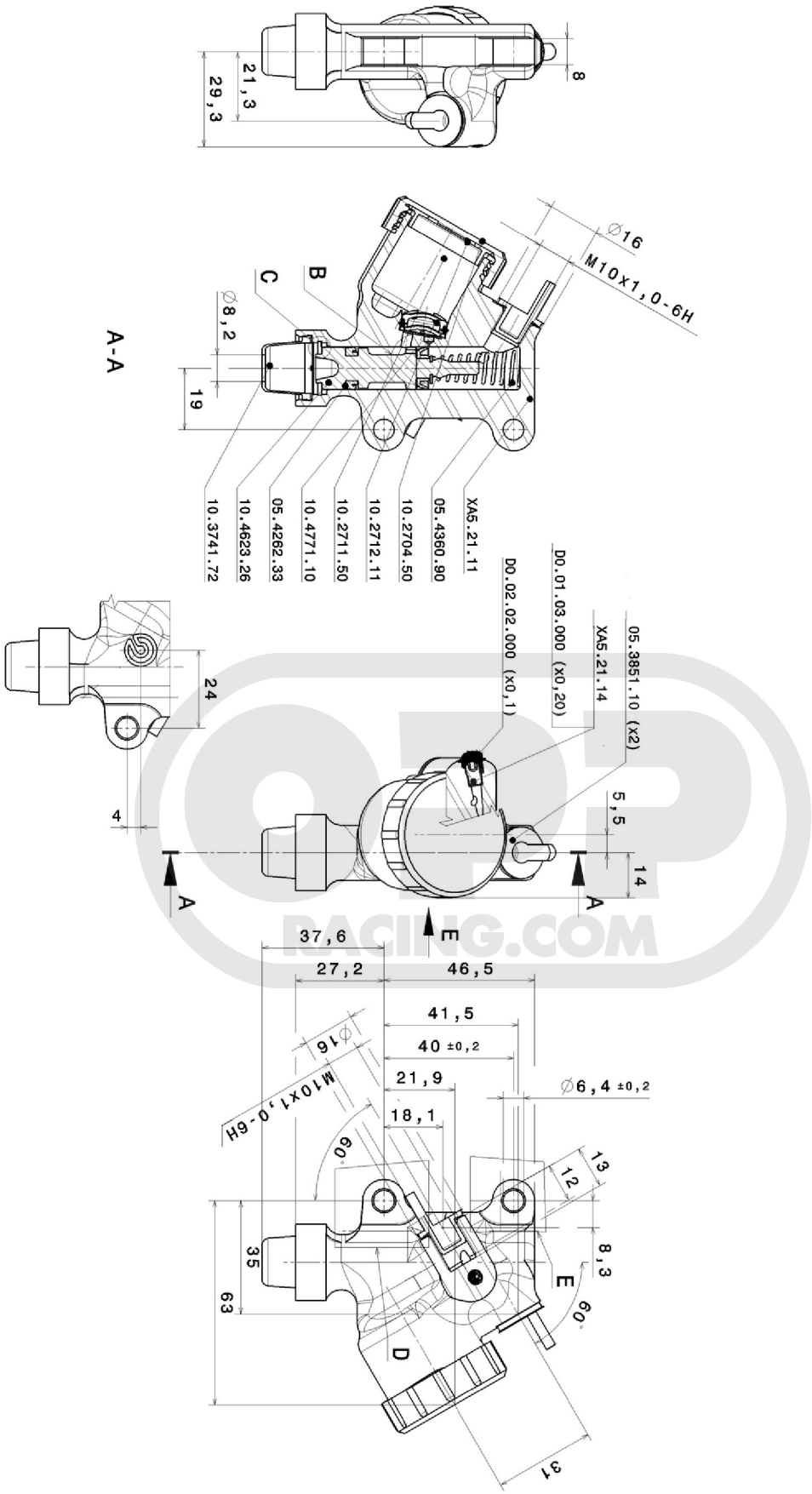

OPP RACING.COM